T TYPE AUTO DISC FILTRATION SYSTEM



FEARURE & ADVANTAGE

Manufactured in polypropylene, resistance to chemical products, wear-resistant;Chip built-in controller to collect water pressure data, achieve unmanned automatic perform; Continuous filtering for water supply during back flush;



Smart back flush auto-procedure setting by the discrepancy of water pressure between inlet & outletManual setting for the back flush procedure regularlyEfficient water saving in auto-flushing with minimum pressure 2.8 bar and flow rate 5 L/s minmum.

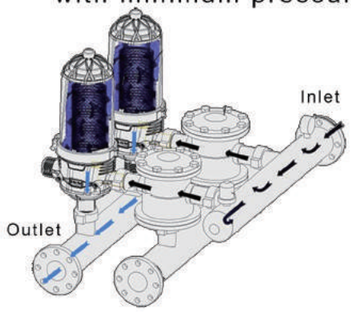

Filtration stage:

Under the command of the controller,the dirty water flow into the filters in filtration stage via the back-flushing control valves,then the Vortex and the disc keeps the particles in the groove of the discs,the clean water flow into the outlet pipe.

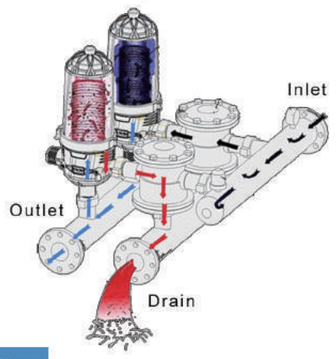

Backwashing stage:

Under the command of the controller,only one of filter starts back-flushing at a time.The back-flushing control valves change the water flow direction,then the filtered water is introduced in reverse through the filtering element which decompresses the stack of discs for the backwash procedure. The solids are expelled from the discs and discharged through

SPECIFICATION

QUALITY OF WATER		3 inch uint micron	3 inch uint mesh	2 inch uint micron	2 inch uint mesh
		200	130	130	100
		80	120	120	150
Good	m3/h	36	32	25	17
Average	m3/h	32	30	20	14
Poor	m3/h	26	24	18	10
Very poor	m3/h	16	14	12	7

BACKWASH PRESSURE

	200 - 130 micron 75-120 mesh	100 micron 150 mesh	50-20 micron
Min backwash pressure	1.8 bar	2.5 bar	3 bar
	26 psi	36 psi	44 psi
Min backwash flow	2.5 l/s	3.1 l/s	3.3 l/s
	39 gpm	50 gpm	52 gpm

HEAD LOSS

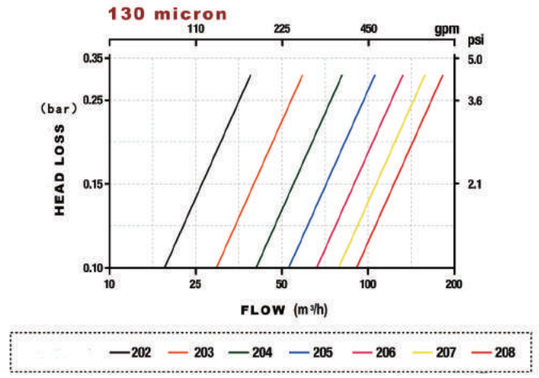

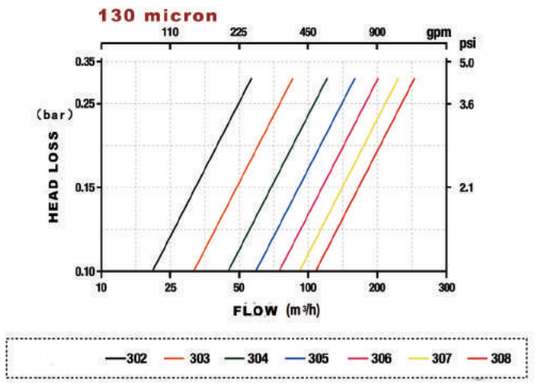

DIMENSION

MODEL		SPECIFICATIONS Unit No.	Manifold	Max Flow (m^3/h)	DIMENSIONS (mm) L	H	T	R	S	W	E	F
2 inch uint	F202-3	2"x 2	3"-80	50	710	880	400	160	170	800	205	280
	F202-4	2"x 2	4"-100	50	710	930	450	210	220	830	215	290
	F203-3	2"x 3	3"-80	75	985	880	400	160	170	800	205	280
	F203-4	2"x 3	4"-100	75	985	930	450	210	220	830	215	290
	F204-4	2"x 4	4"-100	100	1260	930	450	210	220	830	215	290
	F205-4	2"x 5	4"-100	125	1535	930	450	210	220	830	215	290
3 inch uint	F302-4	3"x 2	4"-100	64	710	1050	450	150	200	880	260	305
	F303-4	3"x 3	4"-100	96	985	1050	450	150	200	880	260	305
	F304-6	3"x 4	6"-150	128	1260	1120	520	220	230	910	290	305
	F305-6	3"x 5	6"-150	160	1535	1120	520	220	230	910	290	305
	F305-8	3"x 5	8"-200	160	1535	1180	580	250	260	960	320	305
	F306-6	3"x 6	6"-150	192	1810	1120	520	220	230	910	290	305
	F306-8	3"x 6	8"-200	192	1810	1180	580	250	260	960	320	305
	F307-6	3"x 7	6"-150	224	2085	1120	520	220	230	910	290	305
	F307-8	3"x 7	8"-200	224	2085	1180	580	250	260	960	320	305
	F308-8	3"x 8	8"-200	256	2360	1180	580	250	260	960	320	305

